LED Nixie Tube Driver and Keyboard Control Chip CH455

Datasheet
Version: 1E
http://wch.cn

1. Overview

CH455 is a LED Nixie tube display driver and keyboard scan control chip. CH455 has a built-in clock oscillation circuit, which can dynamically drive 4-bit LED Nixie tubes or 32 LEDs and can also scan the keyboard with 28 keys simultaneously. CH455 exchanges data with a MCU through a 2-wire serial interface composed by SCL and SDA.

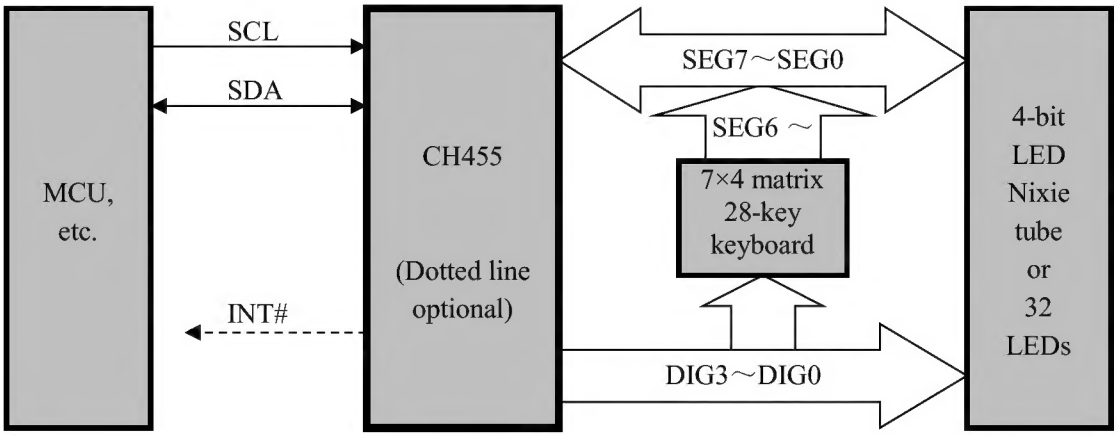

2. Features

- Built-in display current driving stage, segment current not less than 25mA, word current not less than 160mA.
- Dynamic display scanning control, support 8×4 or 7×4, direct drive of 4-bit LED Nixie tubes or 32 LEDs.
- Internal current limiting, provide 8-level brightness control through duty ratio setting.
- Built-in 28-key keyboard controller, based on 7×4 matrix keyboard scanning.
- Built-in pull-down resistor of key status input, built-in jitter suppression circuit.
- Provide active low keyboard interrupt, key release flag bit for query key to be pressed down and released.
- High speed two-wire serial interface, clock speed from 0 to 4MHz, compatible with 2-line I^2C bus, saving pins.
- Built-in power on reset, support 2.7V~5V supply voltage.
- Support low-power sleep, save power, can be waked up by key or command operation.
- Built-in clock oscillator circuit, no need to provide external clock or external oscillator components, more anti-interference.
- Provide DIP18, SOP18 and SOP16 lead-free packages, compatible with RoHS, functions and pins compatible with CH450 chip.

3. Package

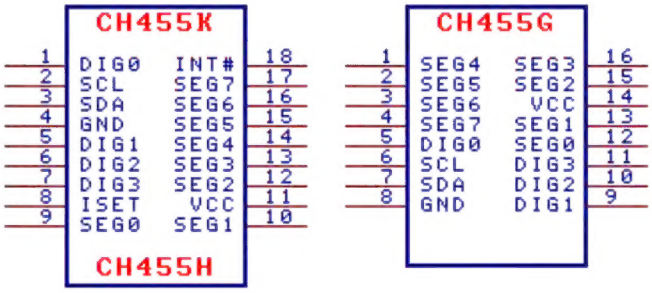

Package	Width		Pitch of Pin		Instruction of Package	Ordering information
DIP18	7.62mm	300mil	2.54mm	100mil	Standard 18-pin dual in-line package	CH455K
SOP18	7.62mm	300mil	1.27mm	50mil	Standard 18-pin wide pin patch	CH455H
SOP16	3.9mm	150mil	1.27mm	50mil	Standard 16-pin pin patch	CH455G

4. Pins

Pin No.		Pin name	Type	Pin description
DIP18/SOP18	SOP16			
11	14	VCC	Power	Positive power supply, continuous current not less than 150mA
4	8	GND	Power	Common ground, continuous current not less than 150mA
9, 10 12, 13 14, 15 16	12, 13 15, 16 1, 2 3	SEG0 ~SEG6	Three-status output and input	Segment drive of LED Nixie tube, active at high level Keyboard scan input, active at high level, built-in pull-down resistor
17	4	SEG7	Output	The decimal point segment drive output of LED Nixie tube, active at high level, Keyboard interrupt output in 7-segment mode, active at low level
1, 5 6, 7	5, 9 10, 11	DIG0 ~DIG3	Output	Word drive of LED Nixie tube, active at low level Keyboard scan output, active at high level
3	7	SDA	Built-in pull-up Open-drain output and input	Data input and output of 2-wire serial interface, Built-in pull-up resistor
2	6	SCL	Input	Data clock of two-wire serial interface, built-in pull-up resistor

18	None	INT#	Built-in pull-up Open-drain output	Keyboard interrupt output, active at low level
8	None	ISET	Input	Segment current upper limit is adjusted. Suspension is the default setting

5. Functional Specification

5.1. General Specification

For data in this manual, those ending with B are binary numbers and those ending with H are hexadecimal numbers. Otherwise, they are decimal numbers. The bit marked as x indicates that the bit can be any value.

The MCU (also DSP, microprocessor and other controllers) controls CH455 chip through the two-wire serial interface. CH455 LED Nixie tube display driver and the keyboard scanning control are independent mutually. The MCU can enable, turn off and set these two functions respectively through operation commands. The two-wire serial interface of CH455 is realized by hardware, and the MCU can frequently carry out high-speed operation through the serial interface, without reducing the working efficiency of CH455.

5.2. Display Driver

CH455 uses dynamic scanning driver for the LED Nixie tube and LED. The order is from DIG0 to DIG3. When one pin sinks the current, the other pins do not sink the current. CH455 has internal current driving stage, which can directly drive 0.5-inch to 1-inch common cathode LED Nixie tube. The segment drive pins SEG6-SEG0 correspond to the segments G-A, the segment drive pin SEG7 corresponds to the decimal point of the LED Nixie tube, and the word drive pins DIG3-DIG0 are respectively connected to the cathodes of 6 LED Nixie tubes. CH455 can also be connected to an 8×4 matrix LED array or 32 independent LEDs, or connected to an external inverse phase driver to support a common anode LED Nixie tube, or connected to a high-power tube to support a large-size LED Nixie tube. In 7-segment mode, the SEG7 pin is used for keyboard interrupt output, and cannot drive the decimal point of the LED Nixie tube.

The CH455 further subdivides the display drive time allocated to each LED Nixie tube into 8 equal segments, and supports 8-level brightness control by setting the display duty ratio. The value of duty ratio ranges from 1/8 to 8/8. The larger the duty ratio is, the larger the average drive current of the LED Nixie tube is, and the higher the display brightness will be. However, the relation between the duty ratio and the display brightness is nonlinear.

CH455 has 4 8-bit data registers, which are used to store 4 word data, corresponding to 4 LED Nixie tubes or 4 groups of LEDs driven by CH455, 8 LEDs in each group. The bits 7-0 of the word data in the data register correspond to the decimal point and segments G-A of LED Nixie tubes respectively. For LED array, the data bit of each word data uniquely corresponds to an LED. When the data bit is 1, the segment of the corresponding LED Nixie tube or LED will be on. When the data bit is 0, the segment of the corresponding LED Nixie tube or LED will be off. For example, the bit 0 of the third data register is 1, so the segment A of the corresponding third LED Nixie tube is on.

The following diagram shows the segment name of the LED Nixie tube

5.3. Keyboard Scan

CH455 keyboard scan feature supports a 7×4 matrix 28-key keyboard. During keyboard scan, pins DIG3~DIG0 are used for the column scan output, and SEG6~SEG0 pins have internal pull-down resistors for the line scan input.

CH455 periodically inserts keyboard scan during the display driver scan. During keyboard scan, the pins DIG3~DIG0 output high level in sequence from DIG0 to DIG3, and the remaining pins output low level. The outputs of the pins SEG6~SEG0 are disabled. When no key is pressed, SEG6~SEG0 are pulled down to low level. When a key is pressed, for example, the key connecting DIG1 and SEG4 is pressed, SEG4 detects high level when DIG1 outputs high level. In order to avoid error code caused by key jitter or external interference, CH455 performs two scans. Only when the results of two keyboard scans are the same, the key will be confirmed to be valid. If CH455 detects a valid key, the key code will be recorded, and active low keyboard interrupt will be generated through INT# pin. At this time, the MCU can read the key code through the serial interface. CH455 does not generate any keyboard interrupt until a new valid key is detected. CH455 supports the combination key of SEG1 and SEG0 specific to the same DIG, and the combination key is of the highest priority. In addition, if multiple keys are pressed at the same time, the key with the smaller key code will take precedence. For example, the key connecting DIG1 and SEG1 and the key connecting DIG1 and SEG0 can be used as the combination keys.

The key code provided by CH455 is 8-bit, bit 7 is always 0, bit 2 is always 1, bits 1~0 are column scan codes, bits 5-3 are line scan codes, and bit 6 is status code (1 when the key is pressed, 0 when the key is released). For example, when the key connecting DIG1 and SEG4 is pressed, the key code is 01100101B or 65H. After the key is released, the key code is usually 00100101B or 25H (or other values, but certainly less than 40H), where the column scan code corresponding to DIG1 is 01B, and the line scan code corresponding to SEG4 is 100B. The MCU can read the key code at any time, but it generally reads the key code when CH455 detects a valid key and produces keyboard interrupt. At this time, the bit 6 of the key code is always 1. In addition, if you need to know when the key is released, the MCU can read the key code regularly by inquiry until the bit 6 of the key code is 0.

The following table shows 7×4 matrix key addresses between DIG3~DIG0 and SEG6~SEG0, which are also the sequence addresses of the segments for the LED Nixie tube and LED arrays. As the key code is 8-bit, the bit 6 is always 1 when the key is pressed. When the key is pressed, the actual key code provided by CH455 is the key address in the table plus 40H, that is, the key code should be from 44H to 7FH.

Addressing	DIG3	DIG2	DIG1	DIG0				
SEG0	07H	06H	05H	04H				
SEG1	0FH	0EH	0DH	0CH				
SEG2	17H	16H	15H	14H				
SEG3	1FH	1EH	1DH	1CH				
SEG4	27H	26H	25H	24H				
SEG5	2FH	2EH	2DH	2CH				
SEG6	37H	36H	35H	34H				
SEG0+SEG1	3FH	3EH	3DH	3CH				

5.4. Serial Interface

CH455 has a two-wire serial interface realized by hardware, including two main signal lines: serial data clock input line SCL, serial data input and output line SDA. And an auxiliary signal line: interrupt output line INT#. Wherein, SCL is the input signal line with a pull-up resistor and at high level by default. SDA is a semi-bidirectional signal line with a pull-up resistor and at high level by default. INT# is an open-drain output with a pull-up resistor. When the keyboard scan function is enabled, it acts as a keyboard interrupt output line and at high level by default.

SDA is used for serial data input and output. The high level represents bit data 1, and the low level represents bit data 0. The sequence of serial data input is that the high bit is at the front and the low bit is at the back.

SCL is used to provide a serial clock, CH455 inputs data from SDA on its rising edge and outputs data from SDA on its falling edge.

SDA falling edge occurring during the SCL high level period is defined as the start signal of the serial interface, and SDA rising edge occurring during the SCL high level period is defined as the stop signal of the serial interface. CH455 receives and analyzes the command only after detecting the start signal. Therefore, when I/O pin resources of the MCU are short, SCL pin can be shared with other interface circuits while SDA pin state is unchanged. Both SCL and SDA pins can be shared with other interface circuits if it is possible to ensure that SDA pin changes only when SCL pin is at low level.

INT# is used for keyboard interrupt output and is at high level by default. INT# outputs keyboard interrupt active at low level when CH455 detects a valid key. After the MCU is interrupted, it performs a read operation to CH455, and CH455 recovers the INT# to high level and outputs the key code from SDA. The MCU gets a byte of data from SDA, i.e. the key code.

The communication process between the MCU and CH455 is always divided into six steps. According to the operation direction of MCU, it is divided into two types: write operation for output data and read operation for input data. For the specific process, please refer to Example Program.

Write operation consists of six steps: output start signal, output byte 1, response 1, output byte 2, response 2 and output stop signal. Among them, the start signal and the stop signal are as mentioned above, response 1 and response 2 are always fixed to 1, output byte 1 and output byte 2 respectively contain 8 data bits, namely, one byte of data.

Read operation consists of six steps: output start signal, output byte 1, response 1, input byte 2, response 2 and output stop signal. Among them, the start signal and the stop signal are as mentioned above, response 1 and response 2 are always fixed to 1, output byte 1 and input byte 2 respectively contain 8 data bits, namely, one byte of data.

The following figure shows an example of write operation. The byte 1 is 01001000B, namely, 48H. The byte 2 is 00000001B, namely, 01H.

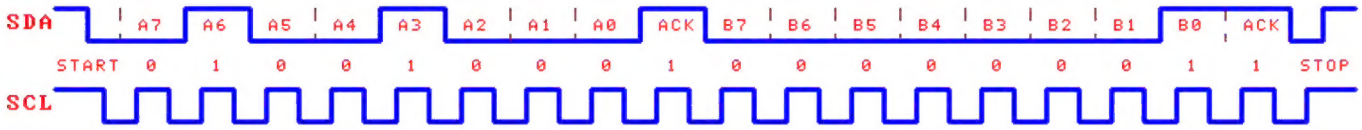

6. Operation Commands

The operation commands of CH455 are divided into three groups. Start signal, stop signal, response 1 and response 2 are the same for each command, except that the data of output byte 1 and byte 2 is different and that byte 2 is transmitted in different direction.

6.1. Setting of System Parameter Commands

The output byte 1 of this command is 01001000B, namely 48H; The output byte 2 is [KOFF][INTENS][7SEG][SLEEP]0[ENA]B.

"Set System Parameter Command" is used to set system-level parameters of CH455: display and keyboard scanning enable ENA, sleep enable SLEEP, 7-segment mode 7SEG, display brightness control INTENS, keyboard scan disable KOFF. This command does not affect the data in the internal data buffer.

The display output and keyboard scan is allowed when ENA bit is 1, and the display driver and keyboard

scan is closed when ENA bit is 0.

When the SLEEP bit is 1, it enables CH455 into a low-power sleep state, so as to save power. CH455 in low-power sleep state can be waked up by any of the following two events. The first event is the detection of keys on SEG3-SEG0, and the valid key code is from 44H to 5FH. The second event is the reception of next operation command sent by the MCU. When CH455 is waken up, SLEEP bit is automatically reset to 0. Sleep and Wake Up operations do not affect other working states of CH455. If ENA bit is 1, key interrupt will occur after waking up. If ENA bit is 0, key interrupt will not occur after waking up.

When the 7SEG bit is 1, it corresponds to the 7-segment mode, and the scan displayed is 7×4. The decimal point of the LED Nixie tube is not supported. The SEG7 pin is used for key interrupt output, which is equivalent to the INT# pin. When the 7SEG bit is 0, it corresponds to the 8-segment mode, and the scan displayed is 8×4, and the decimal point of the digital tube is supported. This bit is usually used only to enable keyboard scan function on CH455G chips without INT# pins.

The display brightness INTENS is controlled by 3-bit data, and the display drive duty ratio of data 001B~111B and 000B is set as 1/8 ~ 7/8 and 8/8 respectively, with the default value of 8/8.
When keyboard scan disables KOFF to be 0, keyboard scan alternates with the display driver. When keyboard scan disables KOFF to be 1, only the display driver will be performed. KOFF is only supported by the CH455 chips with the batch number of 20941XXXX. The bit 7 of byte 2 for other batches of CH455 is always recommended to be 0.

For example, byte 2 data 00000001B indicates an 8-segment mode, and display duty ratio is 8/8. Byte 2 data 01000001B indicates an 8-segment mode, and display duty cycle is 4/8. Byte 2 data 00001001B represents the seven-segment mode, and display duty ratio is 8/8. Byte 2 data 00000101B indicates that it enters the low-power sleep state and the SLEEP bit will be automatically cleared to 0 after being awakened by a key or by a command operation.

6.2. Word-data loading command

The output byte 1 of the command is address 68H, 6AH, 6CH or 6EH, respectively corresponding to the 4 LED Nixie tubes driven by pins DIG0~DIG3. The output byte 2 is [DIG_DATA]B, namely, the value between 00H and 0FFH, which is 8-bit word data.

"Word-data loading command" is used to write the word data DIG_DATA to the data register at the address specified in byte 1. For example, command data 01101100B (namely, 6CH corresponds to DIG2) and 01111001B mean that word data 79H is written into the first data register so that the LED Nixie tube driven by the pin DIG2 will display E.

6.3. Read Key Code Commands

The output byte 1 of this command is 01001111B, namely, 4FH. The input byte 2 is the key code.

"Read Key Code Command" is used to get the code for the valid key that CH455 recently detects. The command is a read operation, and it is an only command with data return. The MCU must first release SDA pin (three-state output is disabled or pulled up to the high level), and then CH455 outputs the key code from SDA pin, the valid data of the key code is bit 7~ bit 0 data, the bit 6 is a status code, the bits 5 ~ bit 0 are scan codes and key addresses.

7. Parameters

7.1. Absolute Maximum Value

Critical value or exceeding the absolute maximum value may cause the chip to work abnormally or even be damaged.

Name	Parameter description	Min.	Max.	Unit
TA	Ambient temperature during operation	-40	85	℃
TS	Ambient temperature during storage	-55	125	℃
VCC	Supply voltage (VCC is connected to the power supply, GND is grounded)	-0.5	6.5	V
VIO	Voltage on the input or output pins	-0.5	VCC+0.5	V
IMdig	Continuous drive current of single DIG pin	0	200	mA
IMseg	Continuous drive current of single SEG pin	0	40	mA
IMall	Total continuous drive current of all SEG pins	0	200	mA

7.2. Electrical Parameters

Test Conditions: TA=25℃, VCC=5V)

Name	Parameter description	Min.	Typ.	Max.	Unit
VCC	Power supply voltage	2.5	5	5.3	V
ICC	Current of power supply	0.2	80	150	mA
ICCs	Static current (SCL, SDA and INT# are at high level)		0.05	0.15	mA
ICCslp	Sleep current (SCL, SDA and INT# are at high level)		0.008	0.02	mA
VIL	Low level input voltage of SCL and SDA pins	-0.5		0.8	V
VIH	High level input voltage of SCL and SDA pins	2.0		VCC+0.5	V
VILseg	Low level input voltage of SEG pin	-0.5		0.5	V
VIHseg	High level input voltage of SEG pin	1.8		VCC+0.5	V
VOLdigx	Low level output voltage of DIG pin (-200mA)			1.2	V
VOLdig	Low level output voltage of DIG pin (-100mA)			0.6	V
VOHdig	High level output voltage of DIG pin (5mA)	4.5			V
VOLsegx	Low level output voltage of SEG pins (-40mA)			1.0	V
VOLseg	Low level output voltage of SEG pins (-20mA)			0.5	V
VOHseg	High level output voltage of SEG pins (20mA)	4.5			V
VOL	Low level output voltage of other pins (-4mA)			0.5	V
VOH	High level output voltage of other pins (4mA)	4.5			V
IDN1	Input pull-down current of SEG pin	-30	-50	-400	uA
IUP1	Input pull-up current of SCL pin	10	200	300	uA
IUP2	Input pull-up current of SDA pin	150	300	500	uA
IUP3	Output pull-up current of INT# pin	500	2000	5000	uA
VR	Default voltage threshold of power on reset	2.0	2.2	2.5	V

7.3. Internal Timing Parameters

Test Conditions: TA=25°C, VCC=5V

(Note: The timing parameters in this table are multiples of the built-in clock periods, and the frequency of the built-in clock decreases with the decrease of the supply voltage)

Name	Parameter description	Min.	Typ.	Max.	Unit
TPR	Reset time generated during power on detection	10	25	60	mS
TDP	Display scan period	4	8	20	mS
TKS	Keyboard scanning interval, key response time	9	18	36	mS

7.4. Interface Timing Parameters

Test Conditions: TA=25°C, VCC=5V, refer to the attached figure

(Note: The unit of measurement in this table is nanosecond, namely, 10^{-9} seconds. If the maximum value is not indicated, the theoretical value can be infinite.)

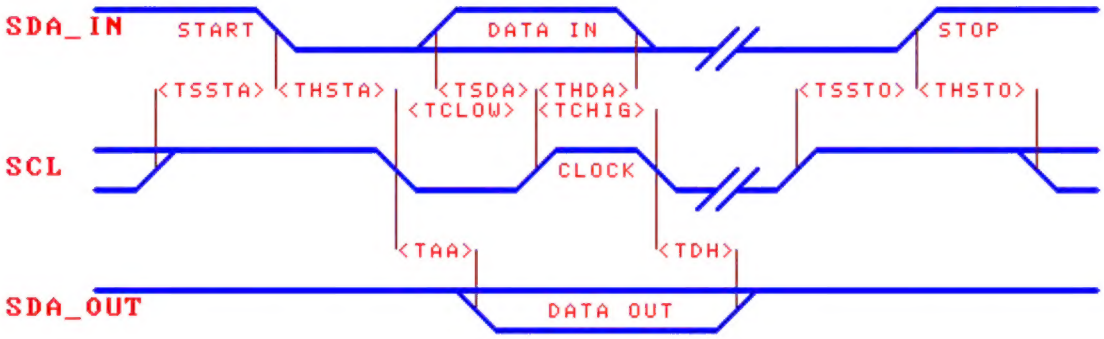

Name	Parameter description	Min.	Typ.	Max.	Unit
TSSTA	Setup time of SDA falling edge start signal	100			nS
THSTA	Holding time of SDA falling edge start signal	100			nS
TSSTO	Setup time of SDA rising edge stop signal	100			nS
THSTO	Holding time of SDA rising edge stop signal	100			nS
TCLOW	Low level width of SCL clock signal	100			nS
TCHIG	High level width of SCL clock signal	100			nS
TSDA	Setup time of SDA input data to SCL rising edge	30			nS
THDA	Holding time of SDA input data to SCL rising edge	10			nS
TAA	Delay SDA output data to SCL falling edge	2		30	nS
TDH	Delay of invalid SDA output data to SCL falling edge	2		40	nS
Rate	Average data transmission rate	0		4M	bps

8. Application

8.1. LED Nixie Tube Driver and Keyboard Scan (as Shown Below)

CH455 is connected to the external MCU through two-wire serial interfaces SCL and SDA. Capacitors C1

and C2 are arranged near the power pins of CH455 to decouple the power supply and reduce the interference caused by high drive current, C2 capacity is recommended to be larger.

CH455 can directly drive 4 common cathode LED Nixie tubes directly and dynamically. After the pins on the same segments of all LED Nixie tubes are connected in parallel (segments A-G and decimal point), they are connected with the segment drive pins SEG0-SEG7 of CH455 through a series current limiting resistor R1. The common cathodes of each LED Nixie tube are driven by the pins DIG0-DIG3 of CH455 respectively. In the figure, the ISET pin is grounded, and the internal current limiting of the chip is closed, so that the resistor R1 connected with the segment pins in series is used to limit and balance the segment drive current. At the supply voltage of 5V, the corresponding segment current is usually 13mA when a 200Ω resistor is connected in series , and 24mA when a 100Ω resistor is connected in series . The greater the resistance of the series current limiting resistor is, the smaller the segment drive current is, and the lower the display brightness of the LED Nixie tube is. The resistance of R1 generally between 50Ω and 1KΩ, when the supply voltage is low (such as VCC = 3.3 V), a current limiting resistor is not required. Under the same other conditions, a higher resistance should be preferred to reduce the power consumption of the CH455 chip itself.

CH455 has a 28-key keyboard scan function. If only a few keys are needed in the application, any unused keys can be removed from 7×4 matrix. In order to prevent short circuit from being formed between SEG signal line and DIG signal line to impact display after the key is pressed, current limiting resistors R11-R14 should be connected in series between CH455 DIG0~DIG3 and the keyboard matrix, and their resistance can be from 2KΩ to 12KΩ. When the keyboard function is used, INT# pin of CH455 can be connected to the interrupt input pin of the MCU or the ordinary I/O pin.

In the figure, the MCU U2 drives 4 common cathode LED Nixie tubes through CH455 and scans 28 keys simultaneously. Due to the reverse leakage of some LED Nixie tubes at high working voltage, it is easy to for CH455 to mistake that a key has been pressed down, so it is recommended to use LEDs D1-D4 to prevent the reverse leakage of LED Nixie tubes, and to improve the level of input signals SEG0-SEG6 during keyboard scan to ensure more reliable keyboard scan. When the supply voltage is low (e.g. VCC=3.3V), these LEDs should be removed to avoid affecting the display brightness.

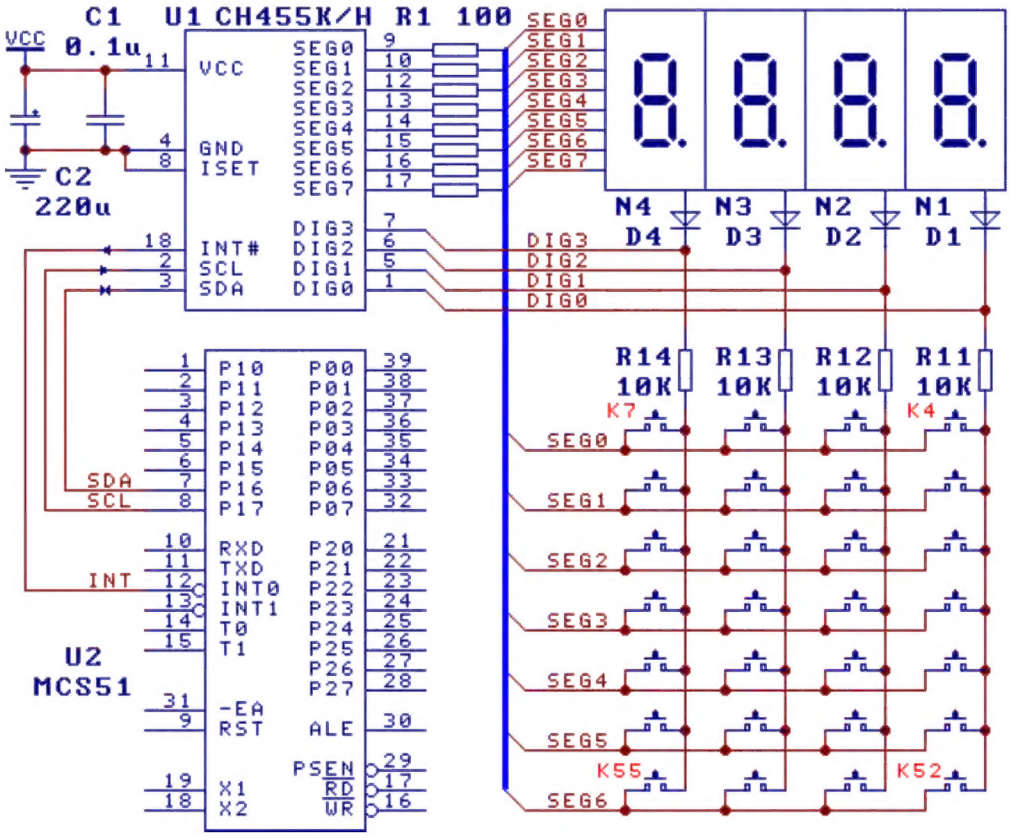

8.2. Drive Common Anode LED Nixie Tube (as Shown Below)

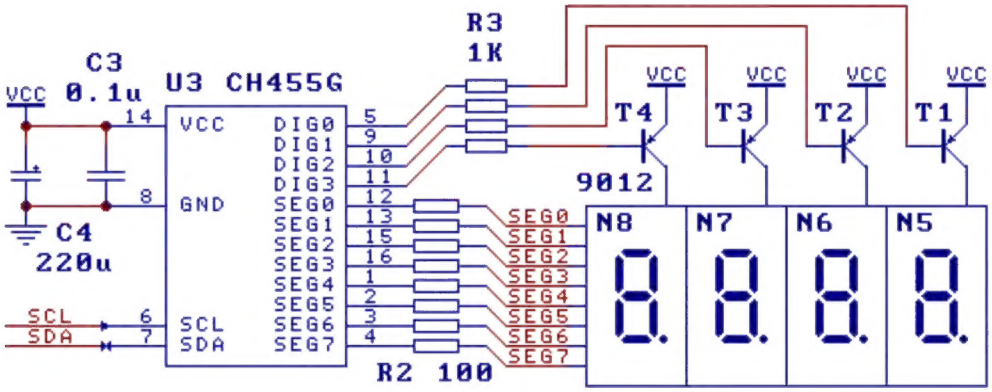

After an inverter is added to the pins DIG0~DIG3, CH455 can drive the common anode LED Nixie tube, but the keyboard scan function must be turned off by setting KOFF. In the above figure, 4 PNP triodes T1~T4 (with model of 9012 or 8550, etc.) and 4 resistors R3 (with resistance of 470Ω-3KΩ) constitute 4 groups of inverters, respectively drive 4 common anode LED Nixie tubes. Since the SEG segment pin of CH455 is driven inversely in the common anode connection, the word data in the command to load the word data should be reversed by bit. If the data bit is 0, it will be ON, and if the data bit is 1, it will be OFF. When the chip is driven inversely, there is no current limiting inside. The R2 in the figure is usually required for external current limiting at 5V supply voltage. When all segments are ON, the total current is about 200mA (higher than the common cathode connection). External current limiting resistor can usually be removed at 3.3V voltage.

4 P-MOSFET tubes Q1~Q4 (model 2301 or 2305, etc.) constitute 4 sets of inverters in the figure below, in which 8 current limiting resistors are removed and replaced by a diode D1 (model IN400X, etc.) to appropriately reduce the 5V supply voltage so as to control the total current. When all segments are ON and the total current is approximate to 500mA (far higher than the common anode connection). Usually the diode is saved at 3.3V voltage.

For more applications that drive large size/high voltage/large current LED Nixie tubes, please refer to the methods in the data manual of CH452 chip.

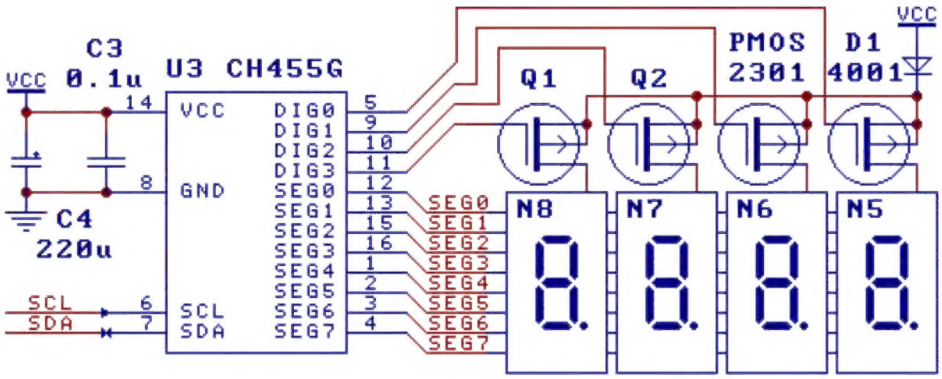

8.3. Simple Application: 7 Segments ×4 + 7 Keys

For CH455G chip in the package type of SOP16, there is no INT# key interrupt output pin. If the key scan function is required to be used, then there are two schemes: one is to enable 7-segment mode, without driving the decimal point of the LED Nixie tube, and use SEG7 as the key interrupt output. The second is that the 8-segment mode is still used, but the MCU actively reads the key value regularly to inquire whether the key is detected.

The figure below is a low-cost simple application based on the previous scheme, which supports 4 7-segment LED Nixie tubes with no decimal point and 7 keys. The SEG7 pin is used as the key interrupt

output in this circuit, the internal current limiting of CH455 chip is used and the external segment current limiting resistor is removed. Only 7 keys are used to remove the 3 short circuit protection resistors on DIG pins. In fact, the R10 in the figure above can also be removed, except that it causes temporary OFF to a segment of the LED Nixie tube when the key is pressed, and the display does not resume until the key is released.

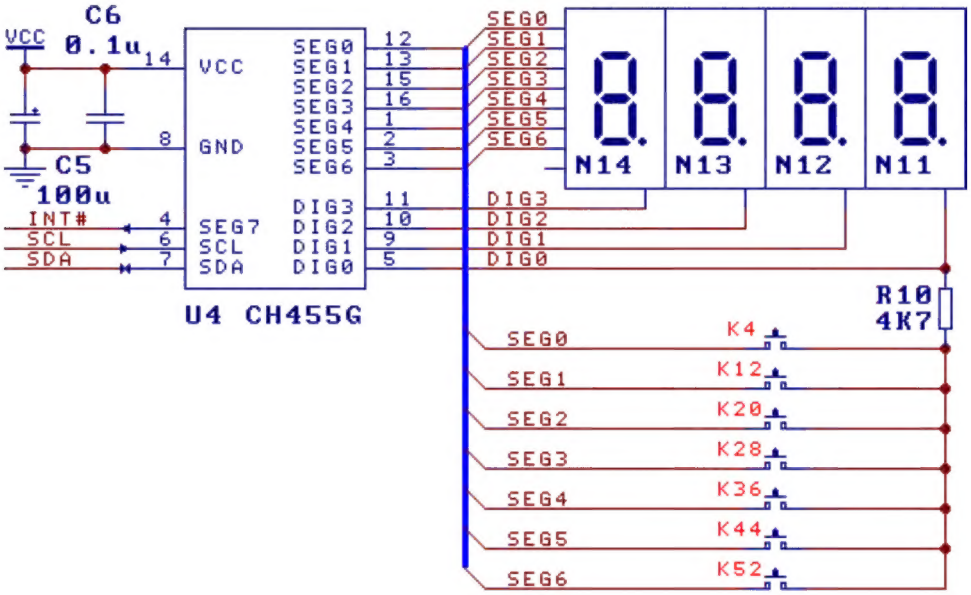

8.4. Simple Application: 7 Segments ×4 + 4 Keys

The figure above is another simple application, which supports 4 7-segment LED Nixie tubes with no decimal point and 4 keys. The SEG0 is used as the key input in this circuit, while SEG7 ~ SEG1 pins are used to drive the segment G ~ segment A of the digital tube. Note that the word data is loaded by moving one bit to the left.

The ISET pin is used to set the segment drive current and is suspended by default. Increasing the ISET pin voltage (jumper resistor to VCC) can reduce the segment drive current, while lowering the ISET pin voltage (jumper resistor to GND) can increase the segment drive current.

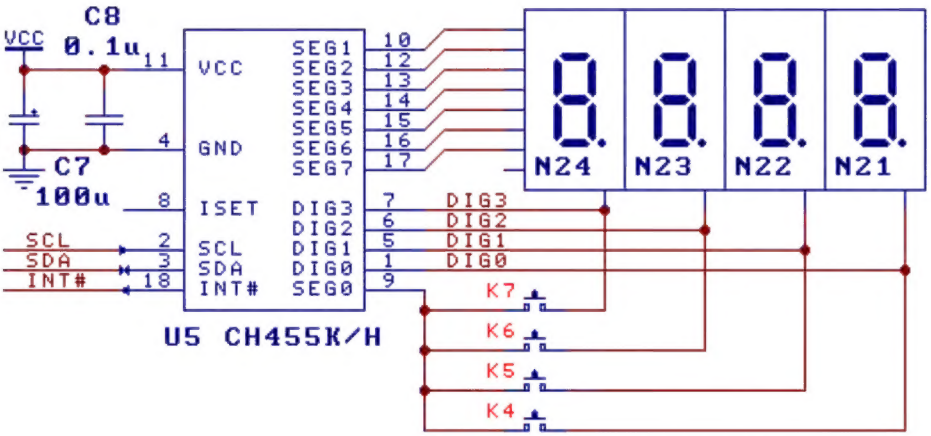

8.5. Anti-interference (Important)

As CH455 drives the LED Nixie tube or LED has high current, high glitch voltage will be generated on the power supply. Therefore, if the PCB wiring of the power line or ground wire is not reasonable, it may affect the stability of the MCU or CH455. Solutions to power interference:

① It is recommended to use shorter and thicker power line and ground wire, especially when CH455

and the MCU are arranged on two PCBs;

② The power supply decoupling capacitor is connected in parallel close to the CH455 between the positive and negative power supplies, at least one 0.1uF leaded multilayer ceramic capacitor or ceramic capacitor and one electrolytic capacitor with a capacity of not less than 100uF.

For external interference when the signal line is long, refer to the following figure for solution:

① At the pin end close to CH455 on the signal line, add the capacitors C3 and C4 with the capacitance of 47pF to 470pF. If the capacitance is higher, the transmission speed of the communication interface for the MCU will be lower.

② Optionally add the resistors R18 and R19 with resistance of 100-470Ω;

③ Reduce the transmission speed between the MCU and CH455 (because of increased resistance and capacitance);

④ If it is driven by a quasi-bidirectional I/O pin (such as standard MCS51 MCU), it will be suggested to add resistors R8 and R9 with resistance of 500Ω to 10KΩ to strengthen the pull-up capacity of the quasi-bidirectional I/O pin for MCS-51 MCU, so as to keep good digital signal waveform during long distance transmission. Pull-up resistors R8 and R9 are not required for short signal lines, and pull-up resistors R8 and R9 are not required for bidirectional I/O pins driven by totem pole.

In addition, for the application environment with strong interference, the MCU can refresh CH455 every a few seconds, including reloading the data register of each LED Nixie tube and restarting the display.

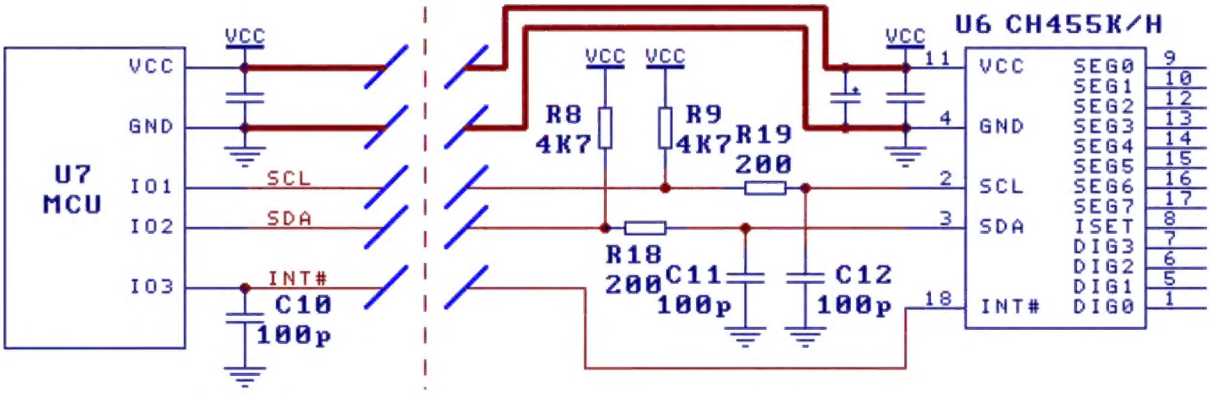

8.6. MCU Interface Program

The CH455 chip interface program is basically compatible with that of the CH450 chip, the subprograms and example programs of CH450 chip can be directly used. The C program language and ASM assembly interface programs of some MCUs are provided on the website.

For 4-bit LED Nixie tube drive, the CH455K chip packaged with DIP18/SOP18 is basically compatible with the CH450K chip pins packaged with DIP20/SOP20. At this time, only DIG4 ~ DIG7 are used and the 18-pin package is aligned to the right end of the 20-pin package.